Sliding Mode Control of Diesel Engine Air-path System With Dual-loop EGR and VGT Based on the Reduced-order Model

Sooyoung Kim[1,a], Seibum Choi[1]

[1]*School of Mechanical, Aerospace & System Engineering, KAIST, Daejeon 305-701, Korea*

Abstract. This paper presents the design of a model-based controller for the diesel engine air-path system. The controller is implemented based on a reduced order model consisting of only pressure and power dynamics with practical concerns. To deal with the model uncertainties effectively, a sliding mode controller, which is robust to model uncertainties, is proposed for the air-path system. The control performance of the proposed control scheme is verified through simulation with the valid plant model of a 6,000cc heavy duty diesel engine.

1 Introduction

As environmental regulations for diesel engines have become stricter, the worldwide automotive industries need to develop more environmental-friendly engine systems continuously. In these days, most diesel engines are commonly equipped with exhaust gas recirculation (EGR) system and variable geometry turbine (VGT). With the combination of EGR and VGT, the amount of emissions can be reduced significantly because it can adjust fundamental properties of combustion in the diesel engine. Recently, dual-loop EGR systems, consisting of two EGR systems: high pressure (HP) EGR and low pressure (LP) EGR, are often installed in production engines for the effective utilization of EGR functions.

As the hardware configurations of diesel engines have been developed, research on precise control of diesel engines has also been required. One of the main issues in the air-path control is to treat coupling properties of HP EGR and VGT effectively, both of which are driven by exhaust gases. The strong coupling effects between HP EGR system and VGT was investigated in [8]. To handle control problems of this highly coupled system, various model-based control methods of VGT and EGR systems have been investigated. Many studies have been conducted on the control of single-loop EGR systems [1]-[9] and a few studies on the control of dual-loop EGR systems, which is a relatively new research field.

Design of a controller for the air-path system is starting from selection of set-points which indicate the required engine performances such as desired engine torque or emissions. In specific, because the diesel air-path control is focusing on the simultaneous reduction of hazardous emitted materials of particulate matters (PM) and nitrogen oxide (NOx) while keeping generating desired torque, the set-points are concerned with desired values of air to fuel ratio (AFR), EGR rate, and engine torque. The problem is that those combustion variables such as EGR rate and AFR cannot be directly regulated by an engine controller. Hence, we need to select proper control states to be controlled for the combustion variables to satisfy the set-point requirements. In this paper, intake manifold pressure, exhaust manifold pressure, and fresh air flow rate are chosen as control states considering their physical importance in the operations of the air-path and availability of sensors [9, 10]. This paper investigates the design of a model-based controller for the states, which is based on the 5th-order reduced model of the air-path. The reduced order model is composed of only pressure and power dynamics considering availability of sensors. To treat the model uncertainties well, the method of a sliding mode control is adopted for the controller implementation.

2 Air-path Modeling

The structure of the air-path system with dual-loop EGR and VGT is described in Fig. 1. The main model equations for the system validated in many papers (e.g. [2], [4]), are introduced in this section. In the next section, a model-based control will be developed under the assumption that the model equations describe behavior of the air-path system well enough to control the system accurately.

The model equations consist of variables such as pressure (p), temperature (T), volume (V), and mass flow rate (W). The subscripts, i, x, c, t, uc, and dt stand for intake manifold, exhaust manifold, compressor, turbine, upstream of compressor, and downstream of turbine respectively.

[a] Corresponding author: westkllr@kaist.ac.kr

2.1 Pressure dynamics

Pressure dynamics are described as (1)-(4) based on the ideal gas law with mass flow rate. The equations are derived under the assumption that the temperature of which the dynamics is relatively slow is not changed in same operating points and volume is constant for all operating conditions.

$$\dot{p}_i = \frac{R\gamma}{V_i}\left(T_{ic}W_c + T_x W_{HPegr} - T_i W_{ie}\right), \quad (1)$$

$$\dot{p}_x = \frac{R\gamma}{V_x}\left(T_e W_x - T_x W_{HPegr} - T_x W_t\right), \quad (2)$$

$$\dot{p}_{uc} = \frac{R\gamma}{V_{uc}}\left(T_a W_{air} + T_{dt} W_{LPegr} - T_c W_c\right), \quad (3)$$

$$\dot{p}_{dt} = \frac{R\gamma}{V_{dt}}\left(T_x W_t - T_{dt} W_{LPegr} - T_{out} W_{out}\right), \quad (4)$$

where γ and R are the specific ratio and ideal gas constant. Note that a diesel particulate filter (DPF) is not included in the after-treatment systems in Fig. 1 that makes pressure drop through after-treatment systems in the LP-EGR loop is negligible. Hence, it is assumed that $p_{dt} \approx p_{DOC}$ throughout this study.

2.2 Turbocharger dynamics

Generally, a turbocharger in a diesel engine has the configuration that turbine is connected with compressor by a turbo-shaft. Turbocharger inertia and turbine speed affects the turbocharger operations, and this behavior can be described as turbocharger speed dynamics (5)

$$\frac{d}{dt}\left(\frac{1}{2}J_{tc}N_{tc}^{2}\right) = P_t - P_c, \quad (5)$$

where J_{tc} and N_{tc} are the turbocharger inertia and speed, respectively.

Power dynamics of a turbocharger is mathematically modelled as (2.10) based on the principle of power balance of compressor and turbine.

$$\dot{P}_c = \frac{1}{\tau_{tc}}\left(-P_c + \eta_m P_t\right), \quad (6)$$

where P_c , P_t , τ_{tc} η_m are the power generated by the compressor, the power delivered by the turbine, a turbocharger time constant, and mechanical efficiency respectively.

The turbine power can be calculated by

$$P_t = \eta_t c_p T_x \left(1 - \left(\frac{p_{dt}}{p_x}\right)^{\mu}\right) W_t, \quad (7)$$

$$\text{where } \mu = \frac{\gamma - 1}{\gamma},$$

where η_t is the turbine efficiency and c_p the specific heat at constant pressure.

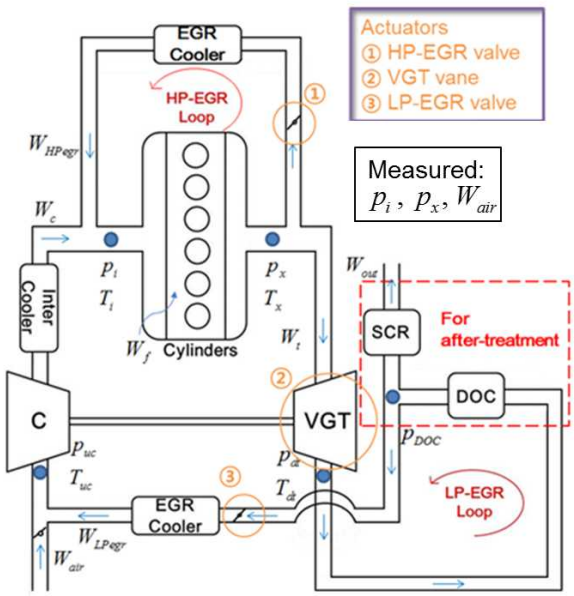

Figure 1. The air-path system with a dual-loop EGR and VGT

2.3 Flow equations

The mass flow rate through the compressor can be described by (8), which is determined mainly by pressure ratio across the compressor and compressor power.

$$W_c = \frac{\eta_c}{T_{uc}c_p}\frac{P_c}{\left(\frac{p_i}{p_{uc}}\right)^{\frac{\gamma-1}{\gamma}} - 1}, \quad (8)$$

where η_c is the compressor efficiency.

HP EGR flow rate is modeled as (9) using an orifice equation.

$$W_{HPegr} = \sqrt{\frac{2\gamma A_{HP}^2 p_x^2}{RT_x(\gamma-1)}\left(\left(PR_{HP}\right)^{\frac{2}{\gamma}} - \left(PR_{HP}\right)^{\frac{\gamma+1}{\gamma}}\right)},$$

$$\text{where } PR_{HP} = \max\left(\frac{p_i}{p_x}, \left(\frac{2}{\gamma+1}\right)^{\frac{\gamma}{\gamma-1}}\right). \quad (9)$$

In (9), PR_{HP} is the pressure ratio across HP EGR flow and A_{HP} the effective area of HP EGR flow determined by the valve position.

In the same manner, the mass flow rate of LP EGR is described as (10).

$$W_{LPegr} = \sqrt{\frac{2\gamma A_{LP}^2 p_{dt}^2}{RT_{dt}(\gamma-1)}\left(\left(PR_{LP}\right)^{\frac{2}{\gamma}} - \left(PR_{LP}\right)^{\frac{\gamma+1}{\gamma}}\right)},$$

$$\text{where } PR_{LP} = \max\left(\frac{p_{uc}}{p_{dt}}, \left(\frac{2}{\gamma+1}\right)^{\frac{\gamma}{\gamma-1}}\right). \tag{10}$$

A model for the fresh air flow rate in dual-EGR systems is designed as (11) to describe the mass flow rate of pure fresh air flow in the dual-loop EGR system using the orifice equation [10].

$$W_{air} = A_{air} p_a \sqrt{\frac{2\gamma}{RT_a(\gamma-1)}\left(\left(\frac{p_{uc}}{p_a}\right)^{\frac{2}{\gamma}} - \left(\frac{p_{uc}}{p_a}\right)^{\frac{\gamma+1}{\gamma}}\right)}. \tag{11}$$

Note that we assume that the intake throttle is fully opened throughout this study. Since the throttle position is fixed, the effective area A_{air} is a constant in (11).

3 Controller Design

3.1 The reduced order model

The 5th-order control-oriented model of the air-system with dual-loop EGR and VGT is designed as (12)-(16) for the controller design. The model consisting of (12), (13), and (16) is a well-known 3rd order control-oriented model for the diesel engine with the single-loop EGR and VGT system validated in references [2, 4, 5]. The 5th-order model is designed by adding two dynamics (14) and (15) representing the properties of the LP EGR loop, to the 3rd-order model [9, 10]. The 5th-order model is implemented under the following assumptions:

1. Fraction states of oxygen or burnt gas, which are hard to measure and not directly coupled with other dynamics, are omitted [7].
2. Temperature states whose dynamics are relatively slow are ignored [2, 5].
3. Variations of the temperature states are negligible.

$$\dot{p}_i = k_1\left(W_c + W_{HPegr} - k_e p_i\right), \tag{12}$$

$$\dot{p}_x = k_2\left(W_x - W_{HPegr} - W_t\right), \tag{13}$$

$$\dot{p}_{uc} = k_3\left(W_{air} + W_{LPegr} - W_c\right), \tag{14}$$

$$\dot{p}_{dt} = k_4\left(W_t - W_{LPegr} - W_{out}\right), \tag{15}$$

$$\dot{P}_c = \frac{1}{\tau_{tc}}\left(-P_c + \eta_m \eta_t c_p T_x \left(1 - \left(\frac{p_{dt}}{p_x}\right)^{\mu}\right) W_t\right), \tag{16}$$

$$\text{where } k_1 = \frac{RT_i}{V_i},\ k_2 = \frac{RT_x}{V_i},\ k_3 = \frac{RT_{uc}}{V_{uc}},$$

$$k_4 = \frac{RT_{dt}}{V_{dt}},\ k_e = \frac{\eta_v N V_d}{120 RT_i}.$$

In (12), the cylinder-in flow rate W_{ie} is modelled by the speed-density equation and denoted as $k_e p_i$ where η_v, V_d, and N are the volumetric efficiency, displacement volume, and engine RPM, respectively.

In general, the higher the order the model has, the more information it can have in it. The reduced order model may not be accurate enough to describe the behavior of the real system. However, implementation of the model-based controller in an engine control unit (ECU) would be very difficult when the order of the model is too high. Thus, it is important to develop a practical controller using only limited information of the reduced order model. Uncertainties of the reduced model should be addressed by designing a robust control algorithm. The model is composed of four pressure states and one power dynamics. The order of the model is reduced more than 5 by omitting fraction and temperature states, and easy to be implemented for the controller design.

3.2 Desired trajectories

The objective of control of the air-path system is for the diesel engine in operation to satisfy the emission regulations without sacrificing engine performance. Those desired engine performances are specified by a set-point. The combustion variables such as EGR rate and AFR should be controlled to be in acceptable ranges to meet the emission regulations. However, the combustion performance variables are usually not measured by sensors, so they cannot be directly controlled. Therefore, it is necessary to select proper control states to be controlled for satisfying the target set-point. In addition, control algorithms should take into account practical aspects including sensor availability.

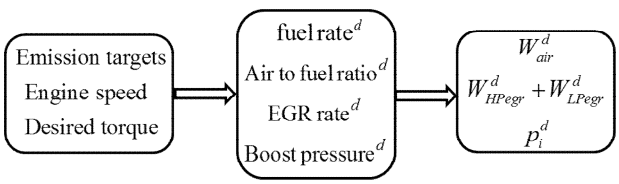

Figure 2. Set-point transformation

Fig. 3-1 shows the set-point transformation to get the desired values of control states. The desired values of the combustion variables including fuel rate, AFR, EGR rate are determined from the target performance criteria. Then, the values of these combustion variables can be transformed into those of the control variables such as EGR flow, fresh air flow, and intake manifold pressure, which can be dealt with in the control system while the fuel rate values are fixed in accordance with desired torque. In this way, the problem of emission regulations

is interpreted as a reference tracking problem [6]. When reference values of fresh air flow rate, total EGR flow rate, and intake pressure are given, the control algorithm should make the system follow the values without deteriorating the system balance.

3.3 Controller design

There are three control actuators in the air-path system this paper deals with: HP EGR valve, LP EGR valve, and VGT rack. Besides, there exist three states to be controlled, p_i, p_x, and W_{air} for satisfying the emission requirements [9]. Proper model-based control algorithm is needed for the control states to track their desired trajectories well. Since the controller is developed based on the reduced order model, it is expected that the uncertainties of the model will degrade the control performance. Hence, a sliding mode controller is proposed to cope with the uncertainties and enhance the tracking performance. The design procedure of the model-based controller is presented as follows.

We define a new output state as (17).

$$y_1 = p_i + \frac{k_1}{k_2} p_x. \tag{17}$$

Differentiating (17) with regard to time and combining with (12) and (13), (18) is derived.

$$\begin{aligned} \dot{y}_1 &= \dot{p}_i + \frac{k_1}{k_2} \dot{p}_x, \\ &= k_1(W_c + W_f - u_1), \end{aligned} \tag{18}$$

where u_1 is the control input for VGT.

Equation (18) prescribes the direct relation of turbine operations with intake and exhaust pressures. Physically, the VGT operations directly affect both the intake and exhaust pressures. In (18), W_{HPegr}, the HP EGR input which was explicitly seen in the pressure dynamics, is not shown any more that enables up to decouple HP EGR operations from pressure dynamics.

Let the sliding surface be defined as:

$$S_1 = y_1 - y_1^d. \tag{19}$$

The time derivative of (19) is described as (20).

$$\dot{S}_1 = k_1(W_c + W_f - u_1) - \dot{y}_1^d. \tag{20}$$

To ensure $S_1 \to 0$, the following control law is derived :

$$\dot{S}_1 \triangleq -\lambda_1 \operatorname{sgn}(S_1), \tag{21}$$

$$u_1 \triangleq W_c + W_f + k_1^{-1}\lambda_1 \operatorname{sgn}(S_1) - k_1^{-1}\dot{y}_1^d, \tag{22}$$

where λ_1 is the control gain for VGT.

The control law u_1 makes $S_1 \to 0$, but does not guarantee that each tracking error of intake pressure and exhaust pressure converges to zero. To ensure both pressure states converge to their reference values, the second sliding surface is defined as:

$$S_2 = p_x - p_x^{\,d}. \tag{23}$$

The time derivative of (23) is described as

$$\dot{S}_2 = k_2(W_{ex} - u_2 - u_1) - \dot{p}_x^d, \tag{24}$$

where u_2 is the HP EGR input.

The corresponding u_2 satisfying $\dot{S}_2 = -\lambda_2 \operatorname{sgn}(S_2)$ is derived as (25).

$$u_2 \triangleq W_{ex} - u_1 + k_2^{-1}\lambda_2 \operatorname{sgn}(S_2) - k_2^{-1}\dot{p}_x^d, \tag{25}$$

where λ_2 is the control gain for HP EGR.

The state of fresh air flow rate can be described as (26) by differentiating (11) with respect to time [9-10].

$$\begin{aligned} \dot{W}_{air} &= \frac{\alpha}{p_a} k_3 (W_{air} + W_{LPegr} - W_c) \cdots \\ &\times \left(\frac{\gamma - 1}{-2\gamma} \beta^{-0.5} + \frac{1}{\gamma} \left(\frac{p_{uc}}{p_a}\right)^{\frac{1-\gamma}{\gamma}} \beta^{0.5} \right) \end{aligned} \tag{27}$$

$$\text{where } k_3 = \frac{RT_{uc}}{V_{uc}}, \quad \alpha = A_{air} p_a \frac{1}{\sqrt{RT_a}} \sqrt{\frac{2\gamma}{\gamma - 1}},$$

$$\beta = 1 - \left(\frac{p_{uc}}{p_a} \right)^{\frac{\gamma-1}{\gamma}}$$

The third sliding surface and its time derivative for the fresh air flow rate are defined as (28)-(29).

$$S_3 = W_{air} - W_{air}^d. \tag{28}$$

$$\begin{aligned} \dot{S}_3 &= \frac{\alpha}{p_a} k_3 (W_{air} + u_3 - W_c) \cdots \\ &\times \left(\frac{\gamma - 1}{-2\gamma} \beta^{-0.5} + \frac{1}{\gamma} \left(\frac{p_{uc}}{p_a}\right)^{\frac{1-\gamma}{\gamma}} \beta^{0.5} \right) - \dot{W}_{air}^d, \end{aligned} \tag{29}$$

where u_3 is the LP EGR input.

The corresponding u_3 satisfying $\dot{S}_3 = -\lambda_3 \operatorname{sgn}(S_3)$ is derived as (30) if we define λ_3 as the control gain for LP EGR.

$$u_3 = W_{LPegr}^{in} = -\frac{\lambda_3 p_a}{k_3 \alpha c} \operatorname{sgn}(S_3) - W_{air} + W_c + k_3^{-1}\dot{W}_{air}^d,$$

$$\text{where } c = \left(\frac{\gamma - 1}{-2\gamma} \beta^{-0.5} + \frac{1}{\gamma} \left(\frac{p_{uc}}{p_a}\right)^{\frac{1-\gamma}{\gamma}} \beta^{0.5} \right). \tag{30}$$

u_3 is the control input for LP EGR valve to control mass flow rate of LP EGR while maintaining desired flow rate of fresh air into the compressor inlet [10].

4 Control Verification

The control verification is carried out with the proven 10th-order model of a 6,000cc heavy duty diesel engine. The analysis on the validation of the 10th-order and the reduced order models comparing with the experimental data is conducted in [9]. The reference trajectories for the feedback controller are acquired experimentally from the actual engine test bench. The verification results are shown in Fig 3-5.

The results show that though the controller is developed on the reduced order model, it shows high tracking performance, which means the controller is robust to the model uncertainties. Particularly, the intake pressure and fresh air flow rate follow the reference trajectories without large overshoot or oscillatory behaviors. There exist some steady state errors for the exhaust pressure control, but the errors are in an acceptable range because the exhaust pressure does not determine certain engine performances. The maximum error in steady states is 1.64% for intake pressure, 1.63% for fresh air rate, and 4.98% for exhaust pressure. The tracking errors are mainly caused by poor accuracy of the reduced order model at the corresponding operating condition.

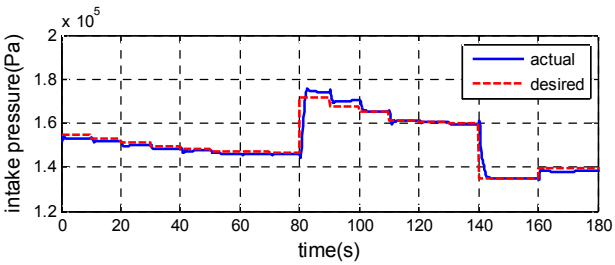

Figure 3. Intake manifold pressure control

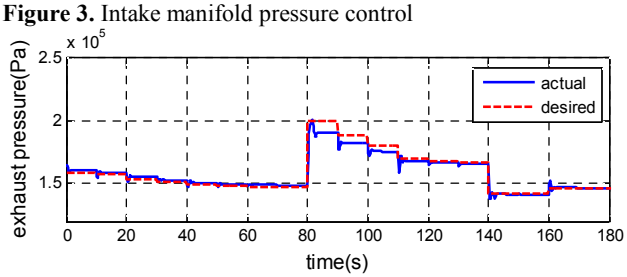

Figure 4. Exhaust manifold pressure control

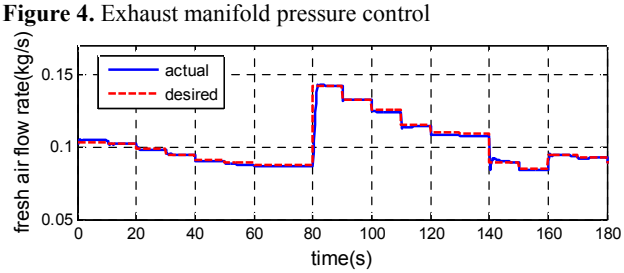

Figure 5. Fresh air flow rate control

Acknowledgement

This research was supported by the MSIP(Ministry of Science, ICT & Future Planning), Korea, under the C-ITRC(Convergence Information Technology Research Center) (IITP-2015-H8601-15-1005) supervised by the IITP(Institute for Information & communications Technology Promotion) and the National Research Foundation of Korea (NRF) grant funded by the Korea government (**MSIP**) (No. 2010-0028680).

References

1. M. Ammann, N. P. Fekete, and L. Guzzella, "Model Based Control of the VGT and EGR in a Turbocharged Common-rail Diesel Engines: Theory and Passenger Car Implementation", *SAE Technical Paper*, (2003)
2. D. Upadhyay, "Modeling and Model based Control Design of the VGT-EGR system for Intake Flow Regulation in Diesel Engines," *Ph.D, dissertation, The Ohio University*, (2001)
3. M. J. van Nieuwstadt, "Cooridinated EGR-VGT Control for Diesel Engines: an Experimental Comparison," *SAE 2000 World Congress*, (2000)
4. Y. Yoon, "A Study of Turbocharged Diesel Engine Modeling and Robust Model Based Sliding Mode Controller Design," Master's Thesis, KAIST, (2011)
5. H. Jin, S. Choi and H. Jung, "Simplified Multiple Sliding Mode Transient Control with VGT and EGR Diesel Engine", *SAE International*, (2013)
6. J. Sarlashkar, "Sliding Mode Control For Diesel Engines with Airflow Dominant Fueling," *JSAE Annual Congress*, (2010)
7. J. Wang, "Hybrid Robust Air-path Control for Diesel Engine Operating Conventional and Low temperature Combustion Modes", IEEE Trans. on Cont. Sys. Tech., **Vol. 16, No. 6**, 1138-1151, (2008)
8. I. Kolmanovsky, "Issues in Modelling and Control of Intake Flow In Variable Geometry Turbocharged Engines," *18th IFIP Conference on System Modelling and Optimization*, (1997)
9. S. Kim, H. Jin, and S. Choi, "Pressure and Flow Based Control of a Turbocharged Diesel Engine Air-path System Equipped with Dual-Loop EGR Systems and VGT", *American Control Conference*, 1493-1498, (2014)
10. S. Kim, H. Jin, and S. Choi, "Pressure Model Based Coordinated Control of VGT and Dual-loop EGR in a Diesel Engine Air-path System", Int. J. of Automotive Tech. (to be published)